# MB-606RE

## Introduction

The MB-606RE is a re-edit of CYM/HH and BD/SD drum parts of the Roland TR-606 to be controlled via MIDI (midibox MB-Modulbox) or CV through analog-Sequencers , in a a Eurorack-designed panel.
Well known Circuit Mods from around Web & time are included by default.

## FrontPanel

- Drilling + Engraving + SmashTV Core32 Layout

## Original Schematics

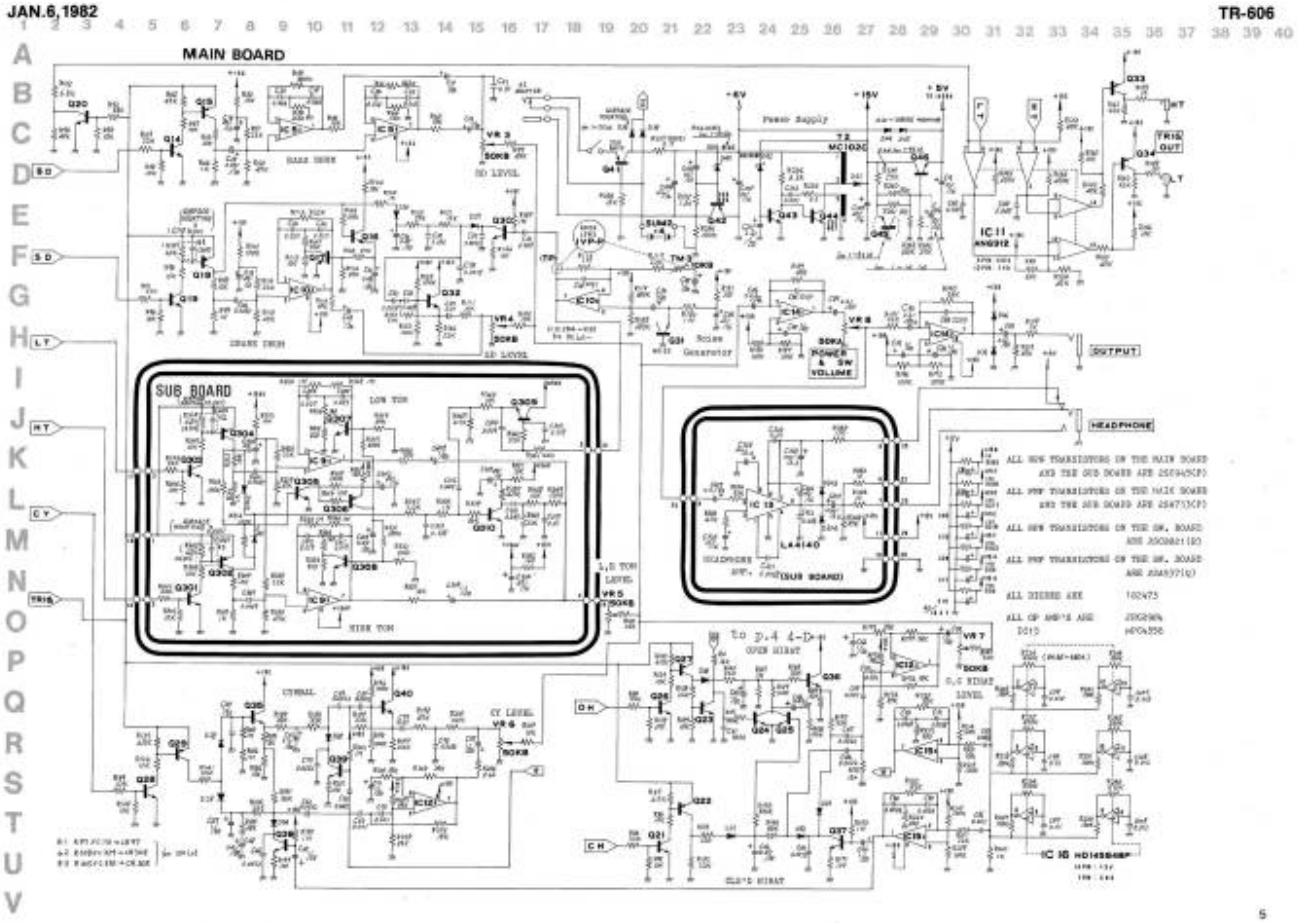


### BD / SD

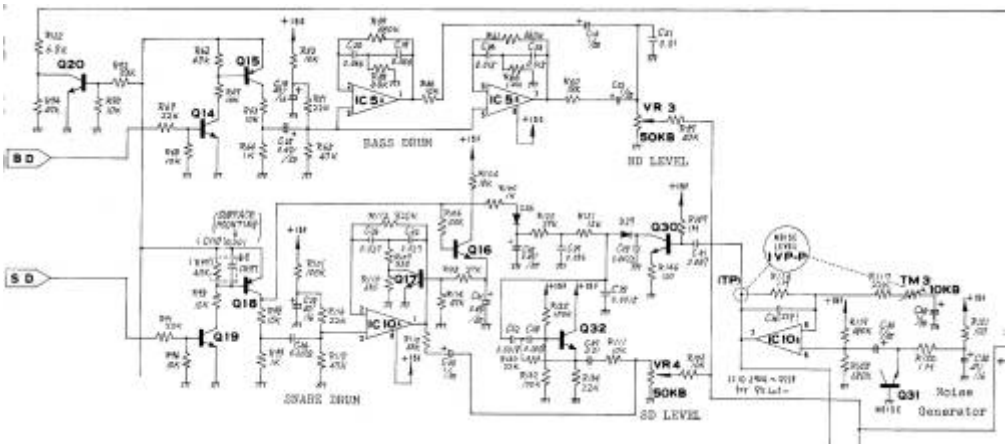


## CY / HH

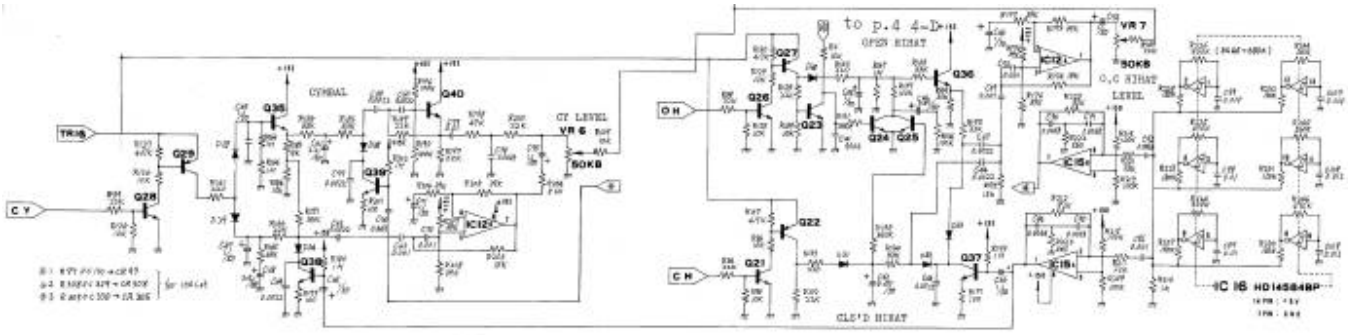


# Mods

### Mod Sources

- Geoff Waterston
- confusedmachines
- amazona-workshop

### Analog Mods

- **HH Noise:** 10K or 50K lin or log,have to check , orginally 10K trimpot, only change volume not to absolutely silence.
- **6OSC-Gain:** 50K log (not sure)
- **CY-HH Ext:** 50K lin
- **CY-HH BPF-Resonance:** 100K Stereo lin
- **CY-HH BPF1:** 5K lin
- **CY-HH BPF2:** 5K lin
- **CY-HPF:** : 50K log
- **HH-HPF:**50K log
- **OH Decay:** 1M lin
- **CH Decay:** 1M lin
- **CY Decay:** 2M lin (internet) Phats machine has a 4M log

- **BD Tune:** 50K Log
- **BD Decay:** 2M lin
- **BD Tone:** 100K lin
- **Noise:** 50K log
- **SD Snappy:** 100K lin
- **SD Decay:** 500K lin
- **SD Tune:** 1M lin

# On-Going

## 1. UI Parts Listing

### Frontpanel

- Jacks 3.5mm @ Thonk
- SPDT Switch ON-OFF-ON @ Rs-components
- Mini DIN 4 poles @ Rs-components

| Value | Type | Qty |
|---|---|---|
| 3.5mm Jack | Vertical PCB-Mount | 13 |
| Switch | SPDT Vertical PCB-Mount ON-OFF-ON | 1 |

### Pots / Knobs

- Alps RK11K Series
- Alpha Pots @ Thonk
- Knobs Suppliers

| Value | Type | Qty |
|---|---|---|
| 5K | Linear | 2 |
| 10K | Linear | 6 |
| 50K | Linear | 6 |
| 50K | Logarithmic | 6 |
| 100K | Linear | 2 |
| 1M | Linear | 3 |
| 2M? | Linear | 2 |
| Knobs | Soft/Plastic/Alu | 31 |

## 2. BD/SD - CYM/HH Parts Listing

### Modded BD

| Value | Type | Qty | Original Designation |
|---|---|---|---|
| 2SA733/BC547 | Transistor | 1 | Q15 |
| 2SC945/BC557 | Transistor | 2 | Q14,Q20 |
| JRC2904/LM2904 | OpAmp | 1 | IC5 |

| Value | Type | Qty | Original Designation |
|---|---|---|---|
| 50KΩ | Pot Log | 2 | Level, ModTune |
| 100KΩ | Pot Linear | 1 | ModTone |
| 2MΩ | Pot Linear | 1 | ModDecay |
| 0,47µF/50V | Capa Elec | 1 | C25 |
| 1µF/50V | Capa Elec | 1 | C22 |
| 33µF/16V | Capa Elec | 1 | C19 |
| 47µF/16V | Capa Elec | 1 | C18 |
| 0,015µF | Capa Ceram | 2 | C23,C24 |
| 0,01µF | Capa Ceram | 1 | C21 |
| 1KΩ | Res 1/4W | 1 | R64 |
| 3,3KΩ | Res 1/4W | 1 | R58 |
| 4,7KΩ | Res 1/4W | 1 | R62 |
| 6,8KΩ | Res 1/4W | 1 | R122 |
| 10KΩ | Res 1/4W | 5 | R52,R56Mod/R67/R68/R93 |
| 22KΩ | Res 1/4W | 2 | R51,R69 |
| 33KΩ | Res 1/4W | 1 | R92 |
| 47KΩ | Res 1/4W | 3 | R59,R65,R94 |
| 100KΩ | Res 1/4W | 1 | R57 |
| 470KΩ | Res 1/4W | 1 | R56 |
| 560KΩ | Res 1/4W | 1 | R61 |

### Modded Noise/SD

| Value | Type | Qty | Original Designation |
|---|---|---|---|
| 2SA733/BC547 | Transistor | 1 | Q18 |
| 2SC945/BC557 | Transistor | 6 | Q19,Q17,Q16,Q30,Q31,Q32 |
| JRC4558/NJM4558D | OpAmp | 1 | IC10 |
| 50KΩ | Pot Log | 2 | Level,Noise |
| 100KΩ | Pot Linear | 1 | ModSnappy |
| 500KΩ | Pot Linear | 1 | ModDecay |
| 1MΩ | Pot Linear | 1 | ModTune |
| 1N4148 | Diode | 2 | D26,D27 |
| 22pF | Capa Ceram | 1 | C36Mod |
| 0,001µF | Capa Ceram | 1 | C97 |
| 0,0015µF | Capa Ceram | 1 | C38 |
| 0,0018µF | Capa Ceram | 2 | C52,C58 |
| 0,0033µF | Capa Ceram | 1 | C34 |
| 0,01µF | Capa Ceram | 1 | C57 |
| 0,027µF | Capa Ceram | 2 | C32,C33 |
| 0,047µF | Capa Ceram | 1 | C51 |
| 0,055µF | Capa Ceram | 1 | C37 |
| 2,2µF | Capa Ceram | 1 | C35Mod |
| 0,47µF/50V | Capa Elec | 2 | C31,C35 |
| 1µF/50V | Capa Elec | 2 | C30,C53 |
| 47µF/16V | Capa Elec | 2 | C28,C54 |

| Value | Type | Qty | Original Designation |
|---|---|---|---|
| 100Ω | Res 1/4W | 2 | R146,R151 |
| 330Ω | Res 1/4W | 2 | R107,R153 |
| 680Ω | Res 1/4W | 1 | R115 |
| 1KΩ | Res 1/4W | 2 | R99,R100 |
| 2,2KΩ | Res 1/4W | 1 | R91Mod |
| 4,7KΩ | Res 1/4W | 1 | R97 |
| 5,6KΩ | Res 1/4W | 1 | RDecayMod |
| 10KΩ | Res 1/4W | 5 | R95,R96,R98,R102,R111 |
| 15KΩ | Res 1/4W | 1 | R121 |
| 18KΩ | Res 1/4W | 1 | R104 |
| 22KΩ | Res 1/4W | 2 | R113,R154 |
| 27KΩ | Res 1/4W | 2 | R105,R120 |
| 47KΩ | Res 1/4W | 2 | R114,R118 |
| 68KΩ | Res 1/4W | 2 | R110,R148 |
| 100KΩ | Res 1/4W | 4 | R101,R106,R152,R155 |
| 470KΩ | Res 1/4W | 1 | R112Mod |
| 680KΩ | Res 1/4W | 1 | R119 |
| 1MΩ | Res 1/4W | 3 | R116,R147,R150 |

**Modded CY**

| Value | Type | Qty | Original Designation |
|---|---|---|---|
| | | | |

**Modded HH**

| Value | Type | Qty | Original Designation |
|---|---|---|---|
| | | | |

## 3.MB-Modulbox-Main2-PCB > 4xAOUT_LC + 8xTrigger In PCB Parts Listing

Integrate CV Scaling circuit

| Value | Type | Qty | Original Designation |
|---|---|---|---|
| | | | |

## 4.Footprints List

- ALPS Pots
- Alpha Pots
- 3,5mm Jack
- Switch

## 5. Schematics in KiCAD

KiCad Pre-Project MAIN by Phatline » shematics have to be overworked

1. Analog drums PCBs
2. UI PCBs

3. Special MB-Modulbox-Main2 PCB (4xAOUT-LC+8xTrigger out)

From:
http://midibox.org/dokuwiki/ - **MIDIbox**

Permanent link:
**http://midibox.org/dokuwiki/doku.php?id=mb-606re&rev=1470341358**

Last update: **2016/08/04 20:09**